Circui

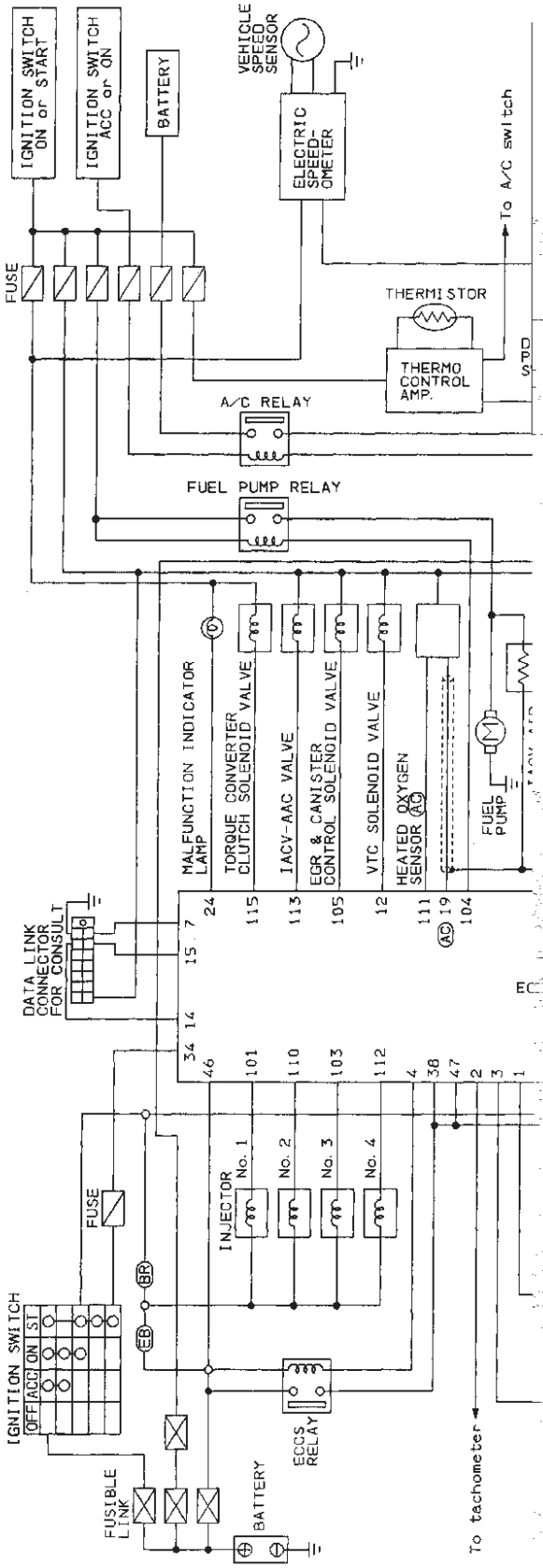
IGNITION SWITCH ON or START
IGNITION SWITCH ACC or ON
BATTERY
VEHICLE SPEED SENSOR
ELECTRIC SPEED-OMETER
To A/C switch
FUSE
THERMISTOR
THERMO CONTROL AMP.
A/C RELAY
FUEL PUMP RELAY
MALFUNCTION INDICATOR LAMP
TORQUE CONVERTER CLUTCH SOLENOID VALVE
IACV-AAC VALVE
EGR & CANISTER CONTROL SOLENOID VALVE
VTC SOLENOID VALVE
HEATED OXYGEN SENSOR
FUEL PUMP
DATA LINK CONNECTOR FOR CONSULT
INJECTOR
No. 1
No. 2
No. 3
No. 4
IGNITION SWITCH
OFF ACC ON ST
ECCS RELAY
FUSIBLE LINK
BATTERY
To tachometer